016-A-OGS OR 016-A-HYS ONE LINE DIAGRAM

GENERAL NOTES

GENERAL NOTES: UNLESS OTHERWISE SPECIFIED.

1.) THE CONNECTION DIAGRAM SHOWN ON THIS SHEET IS A RECOMMENDATION ONLY. THE FINAL SYSTEM CONFIGURATION SHALL BE DETERMINED BY THE ELECTRICIAN INSTALLING THE SOLAR POWER SYSTEM.

2.) ALL WIRING NOT PROVIDED WITH THE PRE-ASSEMBLED SOLAR SYSTEM AND ANY UNLABELED WIRES SHOWN IN THIS PLAN SET WILL BE DETERMINED BY ELECTRICIAN AT FINAL SITE.

3.) ALL WIRING AND MATERIALS REQUIRED TO INTERCONNECT ITEMS PROVIDED BY SOLARSET SHALL BE SUPPLIED AND INSTALLED BY THE END USER OR THEIR CONTRACTOR (OTHERS).

4.) GROUNDING AND BONDING IS SHOWN FOR REFERENCE ONLY. GROUNDING AND BONDING REQUIREMENTS WILL BE DETERMINED ON-SITE AND ARE THE RESPONSIBILITY OF THE ELECTRICIAN INSTALLING THE SOLAR POWER SYSTEM.

5.) ALL SOLAR MODULE FRAMES ARE BONDED USING ILSCO SGB-4 SOLAR BOND CLAMPS AND A CONTINUOUS 8 AWG BARE SOLID COPPER WIRE. A LOOSE COIL OF WIRE, EIGHT FEET IN LENGTH, IS PROVIDED AFTER THE LAST SOLAR MODULE BOND CLAMP. IT IS THE RESPONSIBILITY OF THE ELECTRICIAN INSTALLING THE SOLAR POWER SYSTEM TO CONNECT THE SOLAR MODULE BONDING WIRE TO A GROUND ROD. ALL BONDING CLAMPS ARE INSTALLED ON CLEAN BARE METAL USING OX-GARD ANTI-OXIDANT COMPOUND (DEL CITY PART NUMBER 964DL).

6.) ALL WIRE SIZES ASSUME A MAXIMUM LENGTH OF 100 FEET OR LESS.

7.) WIRE AC-1 IS ONLY PROVIDED WHEN A LOAD CENTER OR OTHER LOAD IS INCLUDED ON THE SOLAR POWER SYSTEM SKID.

8.) WIRE UTIL-1 IS ONLY PROVIDED FOR OFF-GRID SYSTEMS WHICH HAVE A BACKUP GENERATOR CONNECTED TO THE GRID INPUT.

9.) A CURRENT TRANSFORMER WITH WIRE SEN-1 IS SHIPPED WITH ALL SYSTEMS AND MAY BE INSTALLED ON-SITE BY THE ELECTRICIAN INSTALLING THE SOLAR POWER SYSTEM.

10.) WIRES GEN-1 AND REM-1 ARE ONLY PROVIDED WHEN A BACKUP GENERATOR IS MOUNTED ON THE SOLAR POWER SYSTEM SKID.

11.) FIVE EG4, LIFEPOWER4 V2 BATTERIES ARE INCLUDED WITH AN EG4, 18KPV-12LV INVERTER.

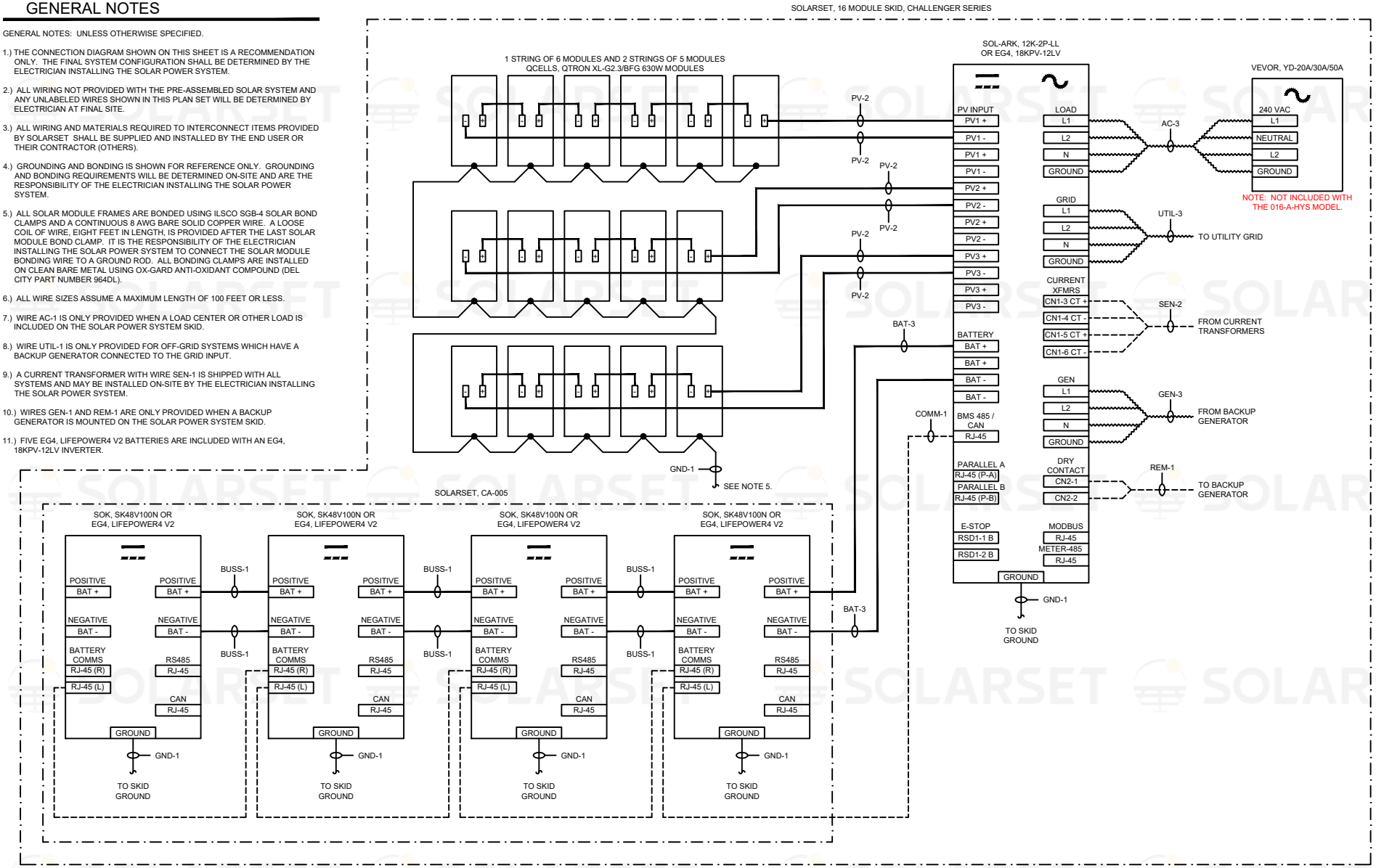

PROPRIETARY AND CONFIDENTIAL - THE INFORMATION CONTAINED IN THIS DRAWING IS THE SOLE PROPERTY OF SOLARSET. ANY REPRODUCTION IN PART OR AS A WHOLE WITHOUT THE WRITTEN PERMISSION OF SOLARSET IS PROHIBITED.

REV	DATE	DESCRIPTION	ID
1	4 SEPTEMBER 2026	NEW DRAWING	GSF
2			
3			
4			
5			
6			
7			
8			
9			
10			
11			
12			

SOLARSET
www.solarset.com
46920 County Road E
Center, CO, 81125
719-754-5100 SOLARSET.COM

DRAWING TITLE: OFF-GRID OR HYBRID SOLAR SYSTEM, 016-A-OGS OR 016-A-HYS ONE LINE DIAGRAM

WORK ORDER: 81XXX

CUSTOMER: CUSTOMER

DRAWING NUMBER: STD1-700-10